VISION OPTO - ELECTRONIC INDUSTRIES

#44-82/1, Tirumala Nagar, Moulali, Hyderabad-500 040.

Tel: 7416086979 Mobile-7306127946

www.visionopto.com email : sales@visionopto.com

0.8" ALPHANUMERIC

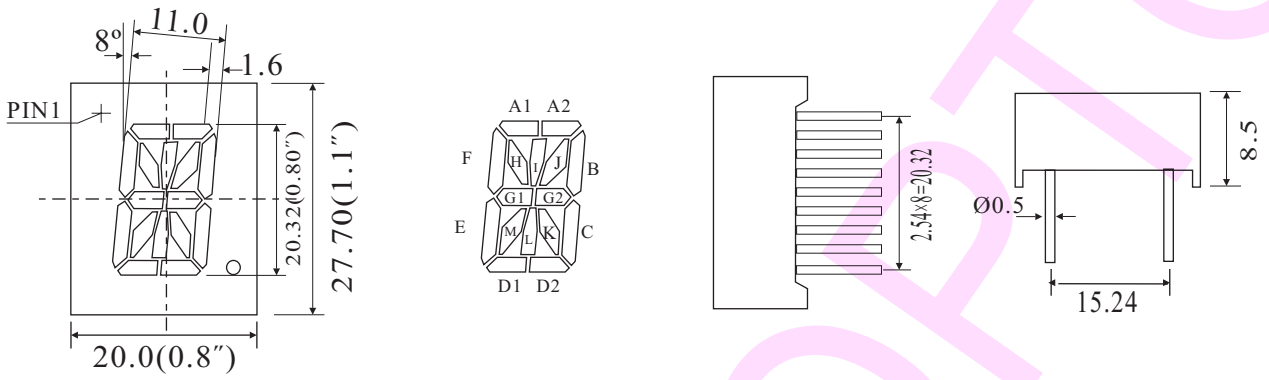

UNIT: MM(INCH) TOLERANCE: ±0.25(0.01")

INTERNAL CIRCUIT DIAGRAM

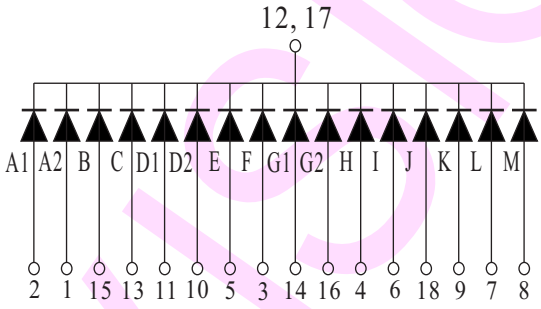

VNA802 CC

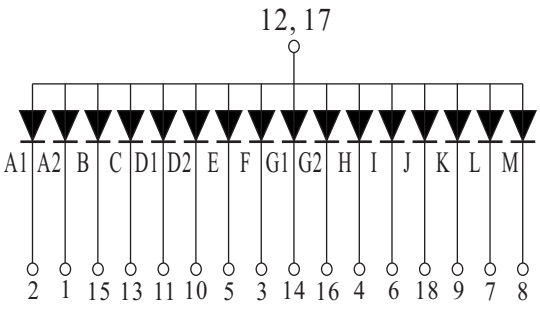

VNA801 CA